NOR ROM DELAY

LAYOUT OF NOR ROM

- Our assumptions
- Metal has capacitance and resistance is ignored
- Poly has capacitance and resistance

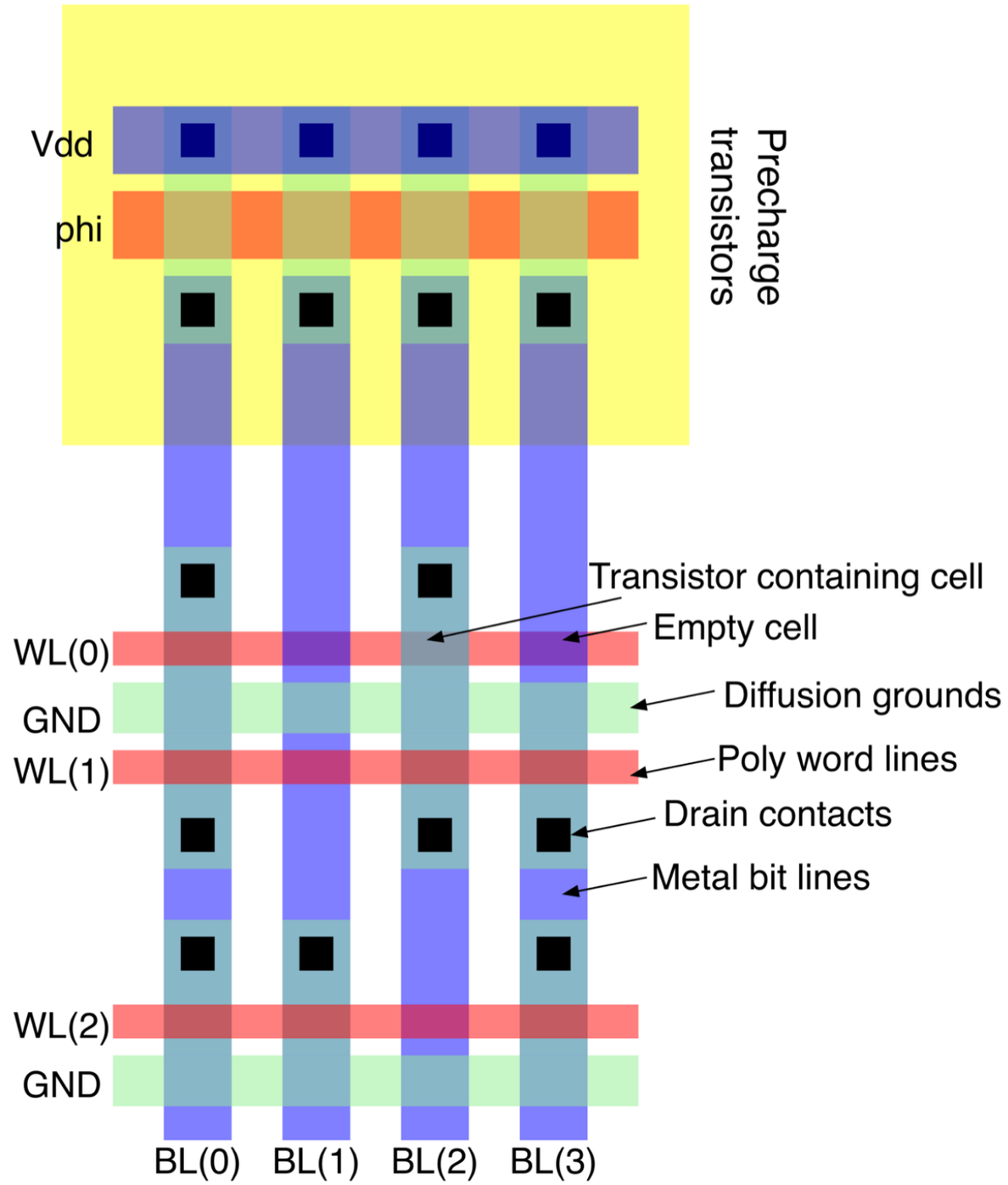

MODELING DELAY

- Knowing materials can model delay
- Target cell is right most
- Maximum word line delay
- No difference in vertical direction

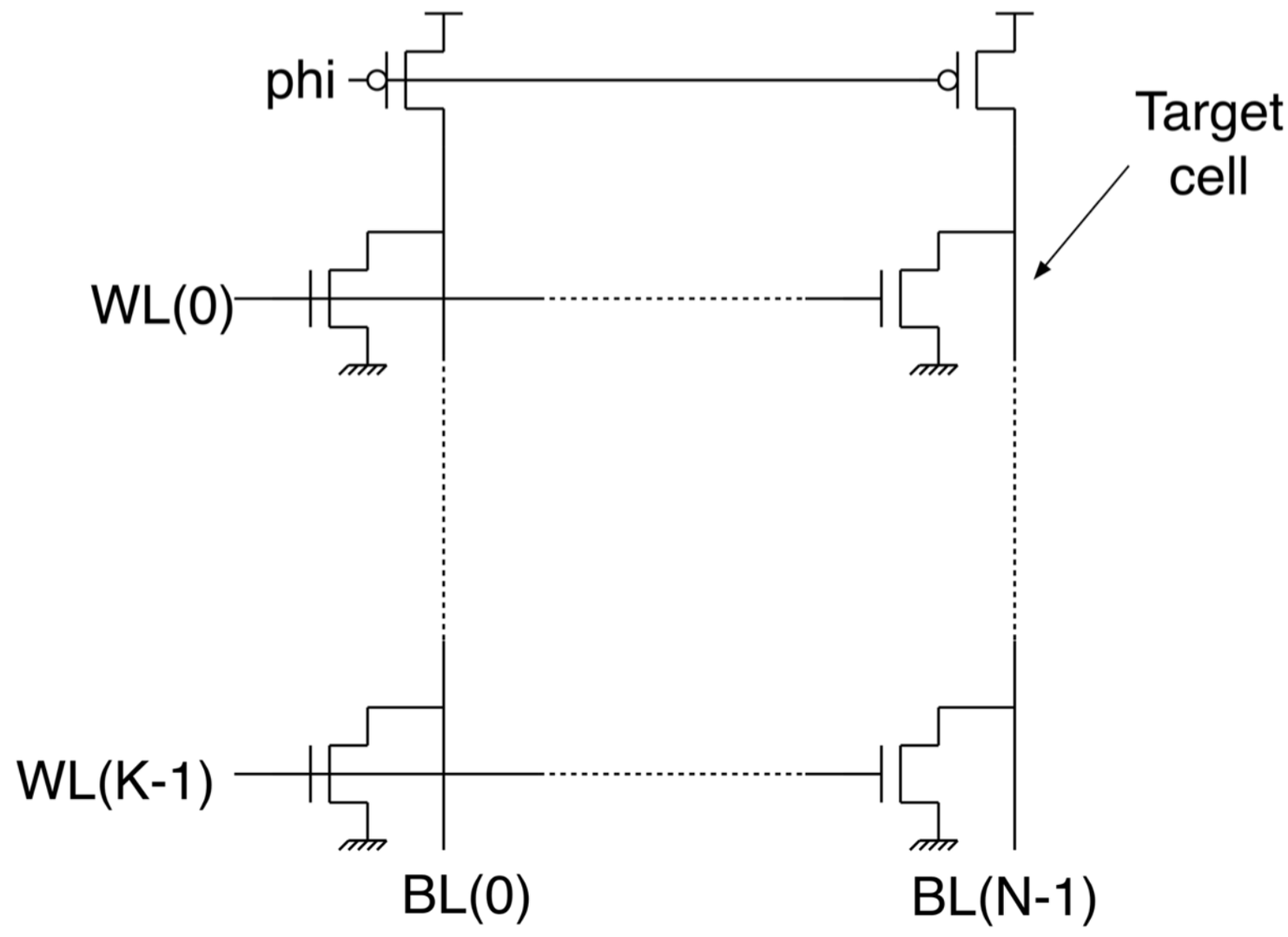

$$t_{\text{read}} = t_{\text{pre}} + t_{\text{wl}} + t_{\text{cell}}$$

PRE CHARGE TIME

- ~~PMOS transistor pre charging the bit line~~
- ~~Bit line is a lumped C~~
- ~~Very simple time constant~~

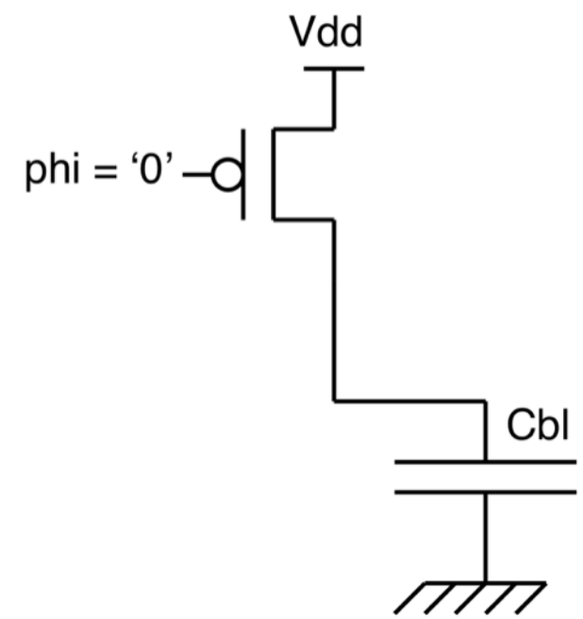

$$\tau_{pre} = R_{pre} C_{BL}$$

$$\tau_{pre} = \frac{R_{p0}}{(W/L)_p} K(C_m + C_{dcell})$$

- R_{pre} the resistance of the PMOS precharge transistor
- C_m represents the metal line capacitance (single cell)
- C_{dcell} represents the drain capacitance of NMOS transistors (single cell)
- K is the number of rows

HOW CAN WE REDUCE THE DELAY?

$$\tau_{pre} = \frac{R_{p0}}{(W/L)_p} K(C_m + C_{dcell})$$

- Reduce the number of rows? Not desired
- Reduce C_m? Not feasible, technology-dependent
- Reduce C_{dcell}? We are already using small unit and further decrease will lead to increase in the cell delay
- Reduce R_{pre}? Yes ☺ this is practical increase (W/L)p
- You have only one PMOS per column so no big overhead on the area

EXACT WORD LINE DELAY CALCULATION

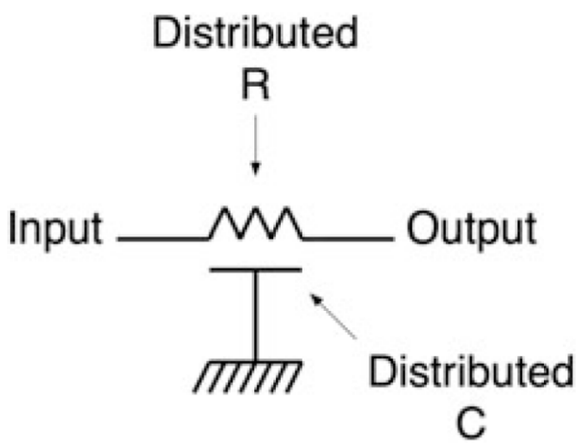

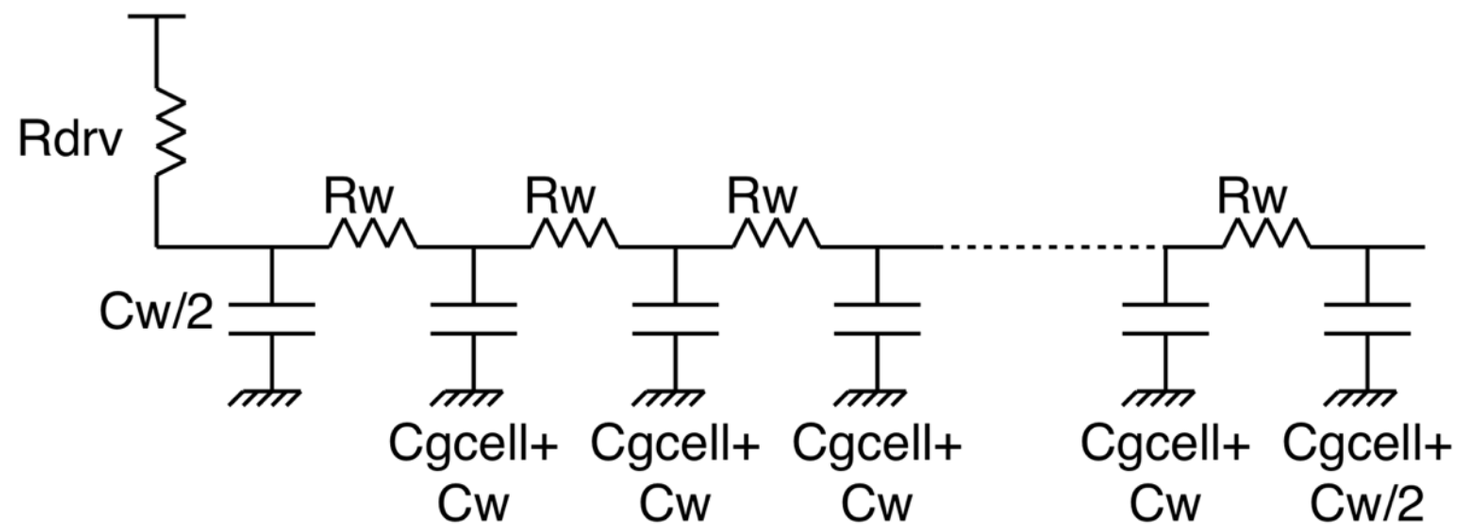

- Assume as many pi-sections as there are cells
- Gate resistance is NOT negligible. We have distributed network.
- C_w and R_w are the capacitance and resistance of the polysilicon line for a single cell
- C_g is the gate capacitance of the NMOS cells
- How can we calculate the delay in such case?

ELMORE TIME CONSTANT

- Assumption: feedforward and no feedback
- What is the time constant of this complex circuit?

1- Calculate the partial time constant of each cap

2- Add them

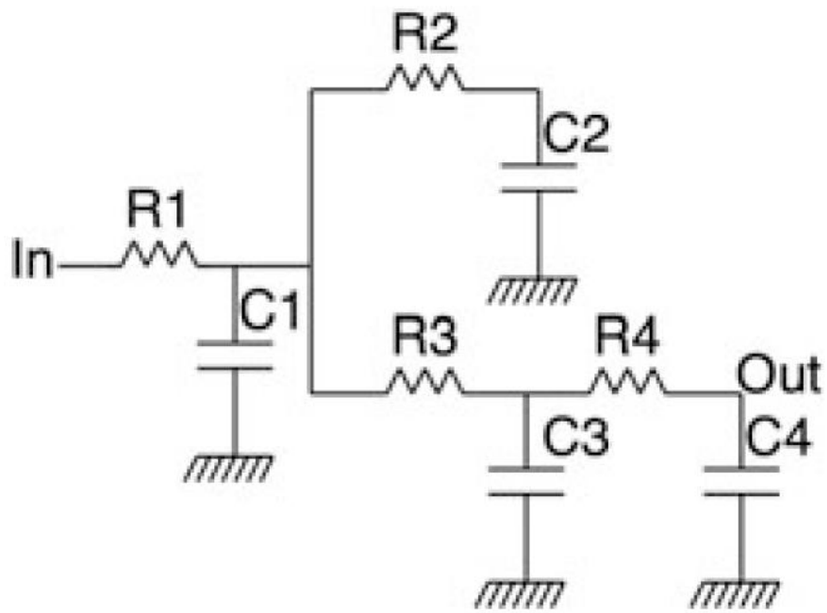

The partial time-constants are calculated by multiplying the capacitance of the node by the value of resistance from the input node to the capacitance node, as long as that resistance is also part of the resistance from the input to the output.

ELMORE TIME CONSTANT

- Thus, the four partial time-constants

$$\tau_1 = C_1 R_1$$
$$\tau_2 = C_2 R_1$$
$$\tau_3 = C_3 (R_1 + R_3)$$
$$\tau_4 = C_4 (R_1 + R_3 + R_4)$$

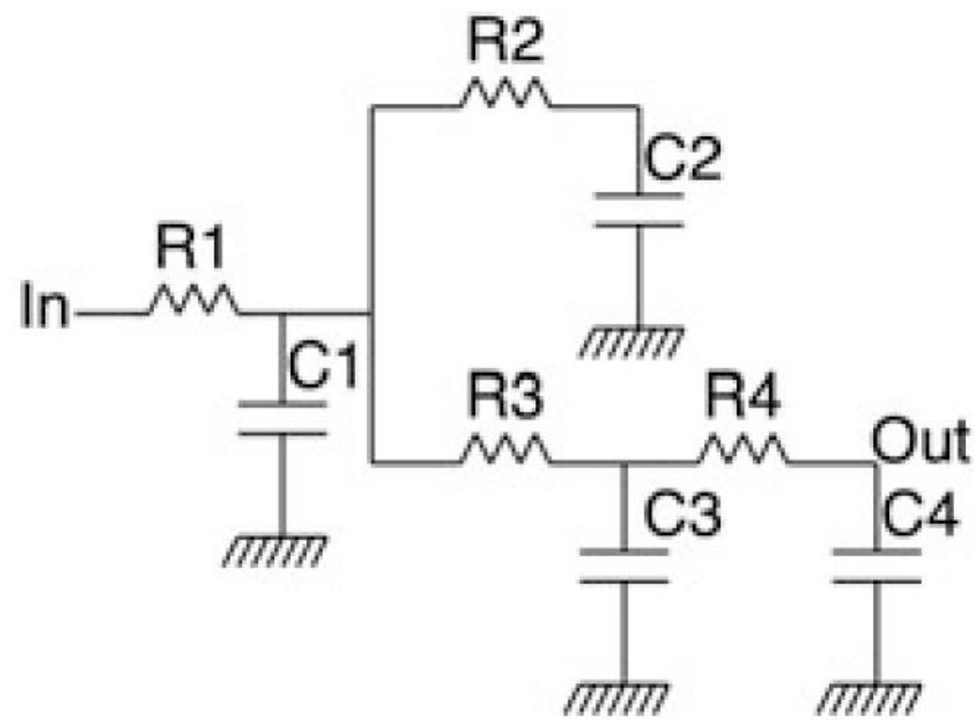

$$\tau = R_1 (C_1 + C_2 + C_3 + C_4) + R_3 (C_3 + C_4) + R_4 C_4$$

EXACT WORD LINE DELAY CALCULATION

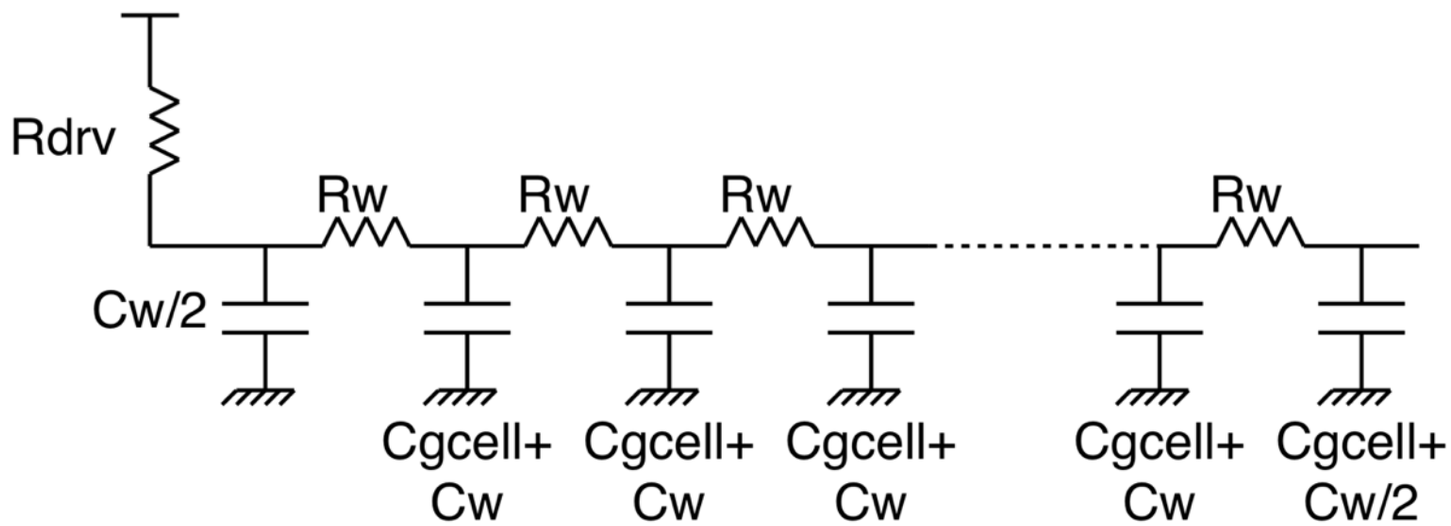

- This is calculated using Elmore delay method

$$\tau_{wl} = R_{drv}\frac{C_w}{2} + (R_{drv}+R_w)(C_{gcell}+C_w) + (R_{drv}+2R_w)(C_{gcell}+C_w) + \dots + (R_{drv}+NR_w)\left(C_{gcell}+\frac{C_w}{2}\right)$$

$$= R_{drv}\frac{C_w}{2} + R_{drv}(C_{gcell}+C_w)(N-1) + R_w(C_{gcell}+C_w)\underbrace{(1+2+3+\dots+N-1)}_{\text{arithmetic series}} + (R_{drv}+NR_w)\left(C_{gcell}+\frac{C_w}{2}\right)$$

Remember: $\sum_{i=1}^{N} a_i = \frac{N}{2}(a_1+a_N)$ $\therefore$ $(1+2+\dots+N-1) = \frac{N-1}{2}(1+N-1) = \frac{N(N-1)}{2}$

$$\therefore \tau_{wl} = N R_{drv}(C_{gcell}+C_w) + \frac{N(N-1)}{2}R_w(C_{gcell}+C_w) + N R_w\left(C_{gcell}+\frac{C_w}{2}\right)$$

VERY APPROXIMATE WORD LINE DELAY

- Lump all gate capacitances in with word line capacitance
  - Use only a single pi-section
- Valid if the number of columns is very large

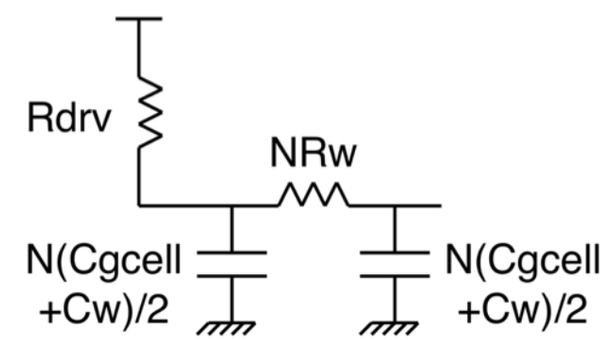

$$\tau_{wl} = R_{drv}(\frac{NC_w}{2} + \frac{NC_{gcell}}{2}) + (R_{drv} + NR_w)(\frac{NC_w}{2} + \frac{NC_{gcell}}{2})$$

$$\tau_{wl} = NR_{drv}(C_w + C_{gcell}) + \frac{N^2}{2}R_w(C_w + C_{gcell})$$

CELL READ DELAY

- ~~A simple time constant~~
- ~~Huge dilemma~~
  - ~~Need to make cell small to promote density~~
  - ~~Cell resistance needs to discharge large BL capacitance~~

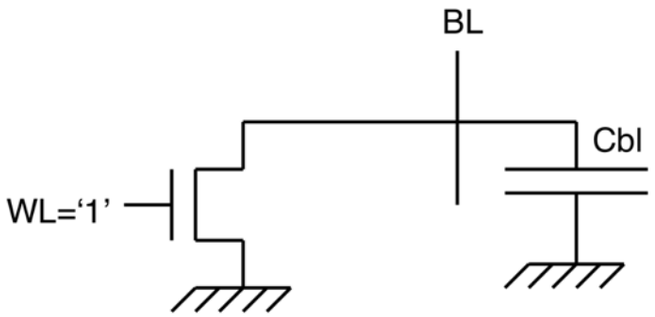

$$\tau_{cell} = R_{cell} C_{BL}$$

$$\tau_{cell} = \frac{R_{n0}}{(W/L)_{cell}} (C_m + C_{dcell}) K$$

NAND ROM DELAY

LAYOUT OF NAND ROM

- Poly WL, Metal BL
- Single metallic ground at bottom
- Extremely dense array
  - Best density among all memories
- Long resistive chains can increase resistance

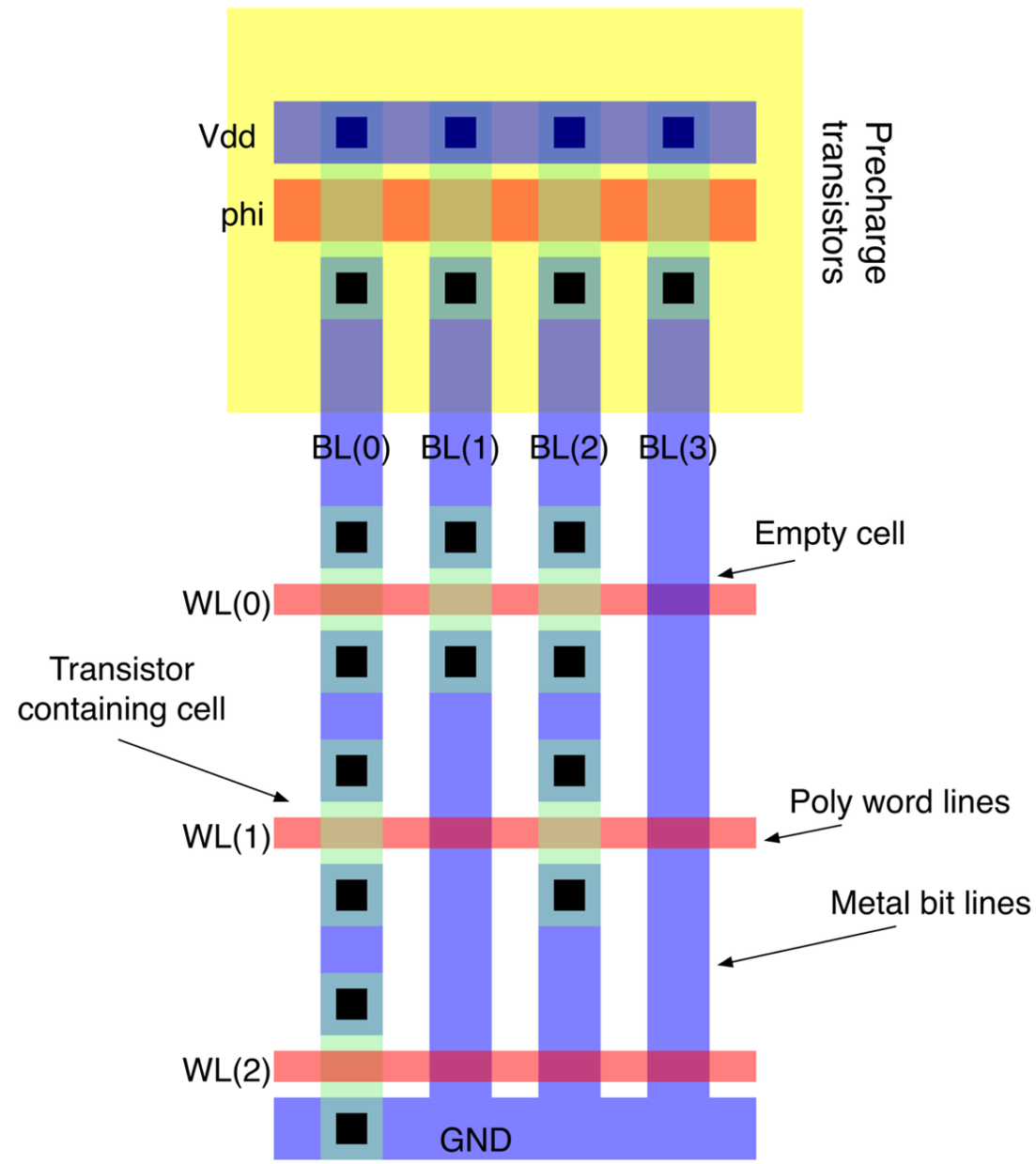

$$t_{\text{read}} = t_{\text{pre}} + t_{\text{wl}} + t_{\text{cell}}$$

NAND ARRAY

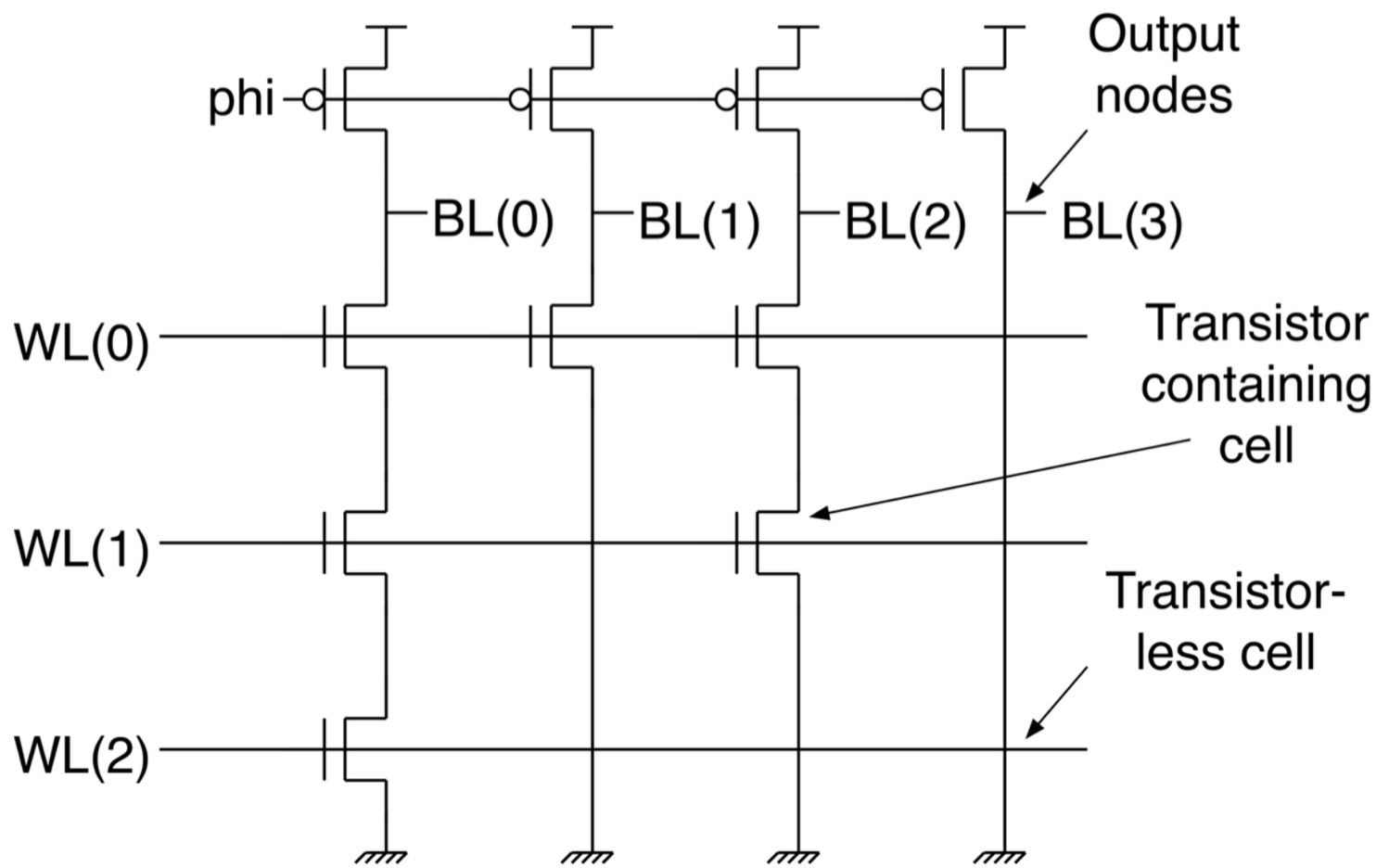

- Same architecture, but every BL is now a NAND gate
- Can also design with pseudo-NMOS loads

TIMELINE FOR READING FROM NAND ROM

- Pre charge BL: WL is “1” for the last transistor in the column to ensure that all internal caps are precharged
- When pre charge is complete lower target WL only
- Cell activated if a transistor does not exist there
  - Bit line discharges down to zero

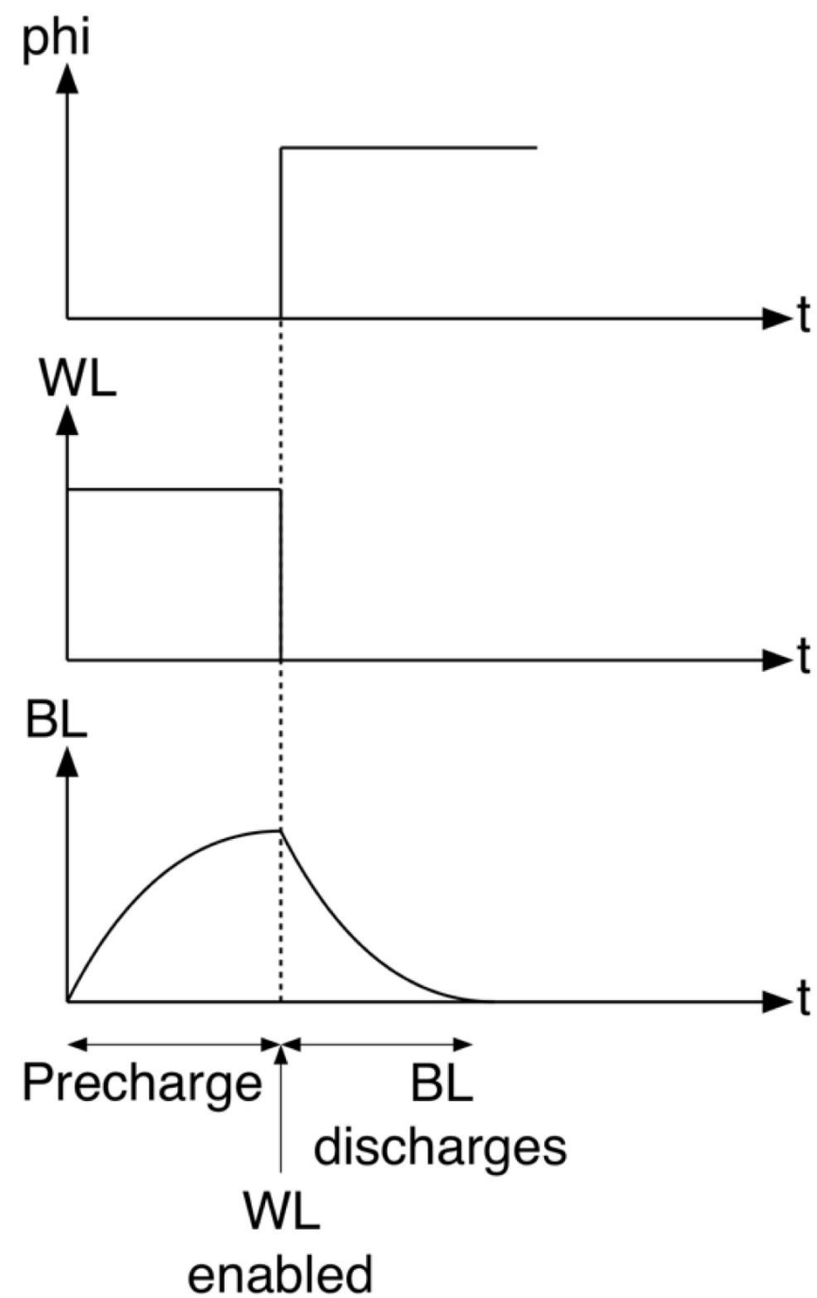

TARGET CELLS FOR CALCULATING DELAY

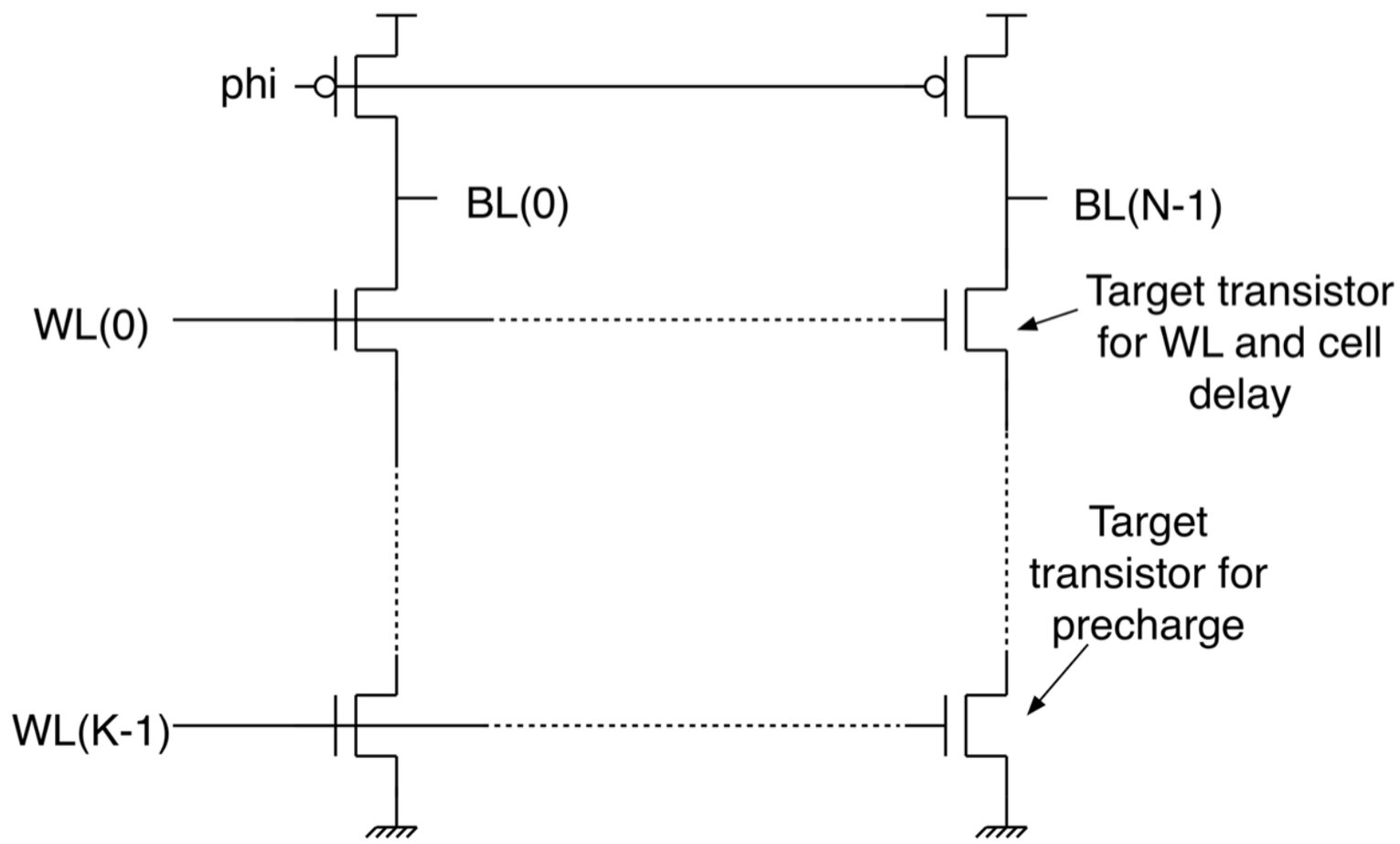

- Top right cell sees highest resistance for WL and cell delay
- Bottom right cell sees highest resistance while precharging

PRECHARGING

- A long RC ladder through the entire bit line
- Assume a transistor in each cel
- Calculate time constant at BL, but taking into consideration loading down to the bottom ce

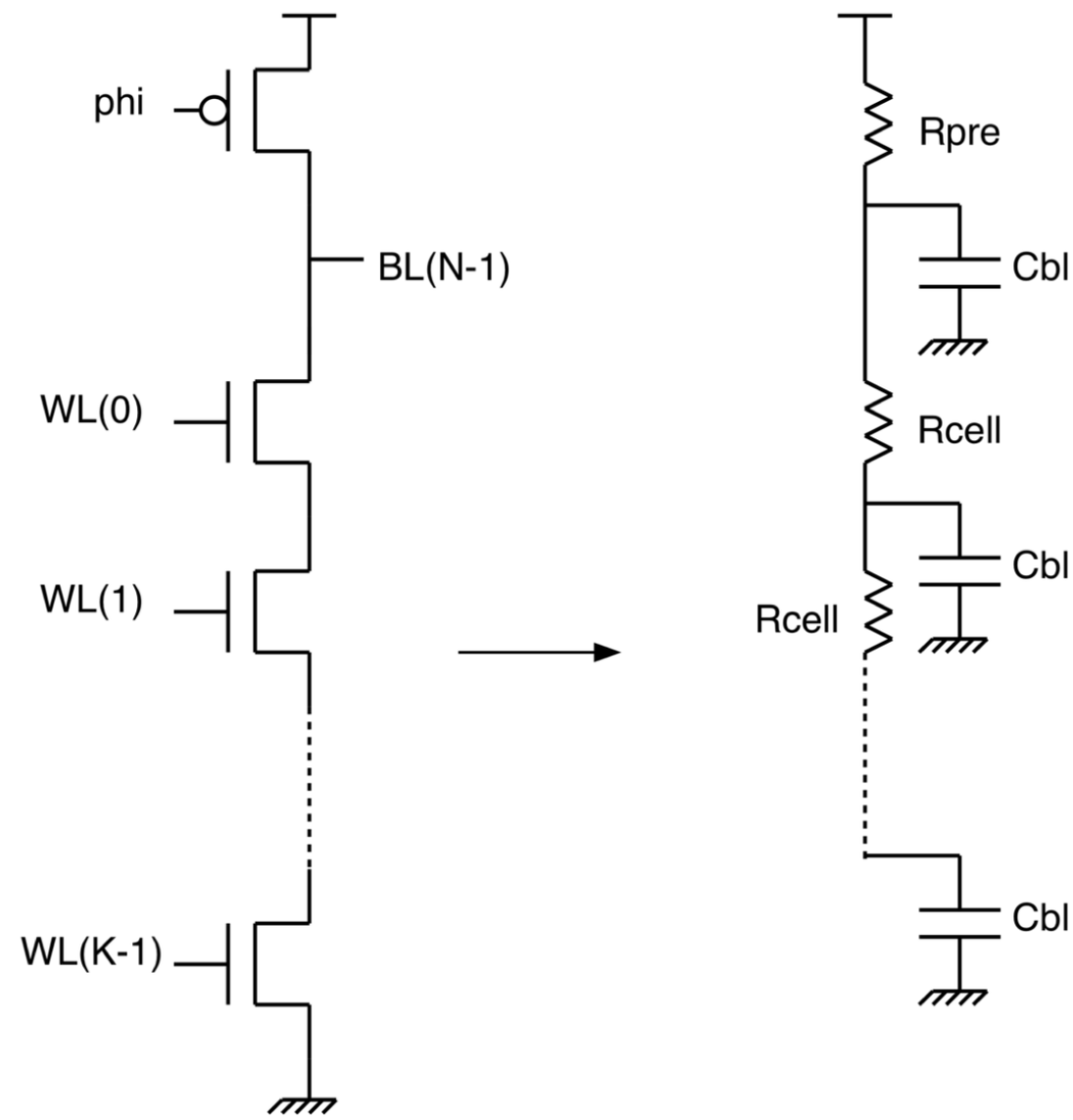

$$\tau_{pre} = R_{pre}C_{bl} + (R_{pre} + R_{cell})C_{bl} + (R_{pre} + 2R_{cell})C_{bl} + \ldots + (R_{pre} + (K-1)R_{cell})C_{bl}$$

C_{bl} is the internal cap at every node

It includes cell's drain capacitance+metal cap+PMOS cap

Approximation: PMOS cap and NMOS cap are equal

PRECHARGING

- You can simplify the series to:

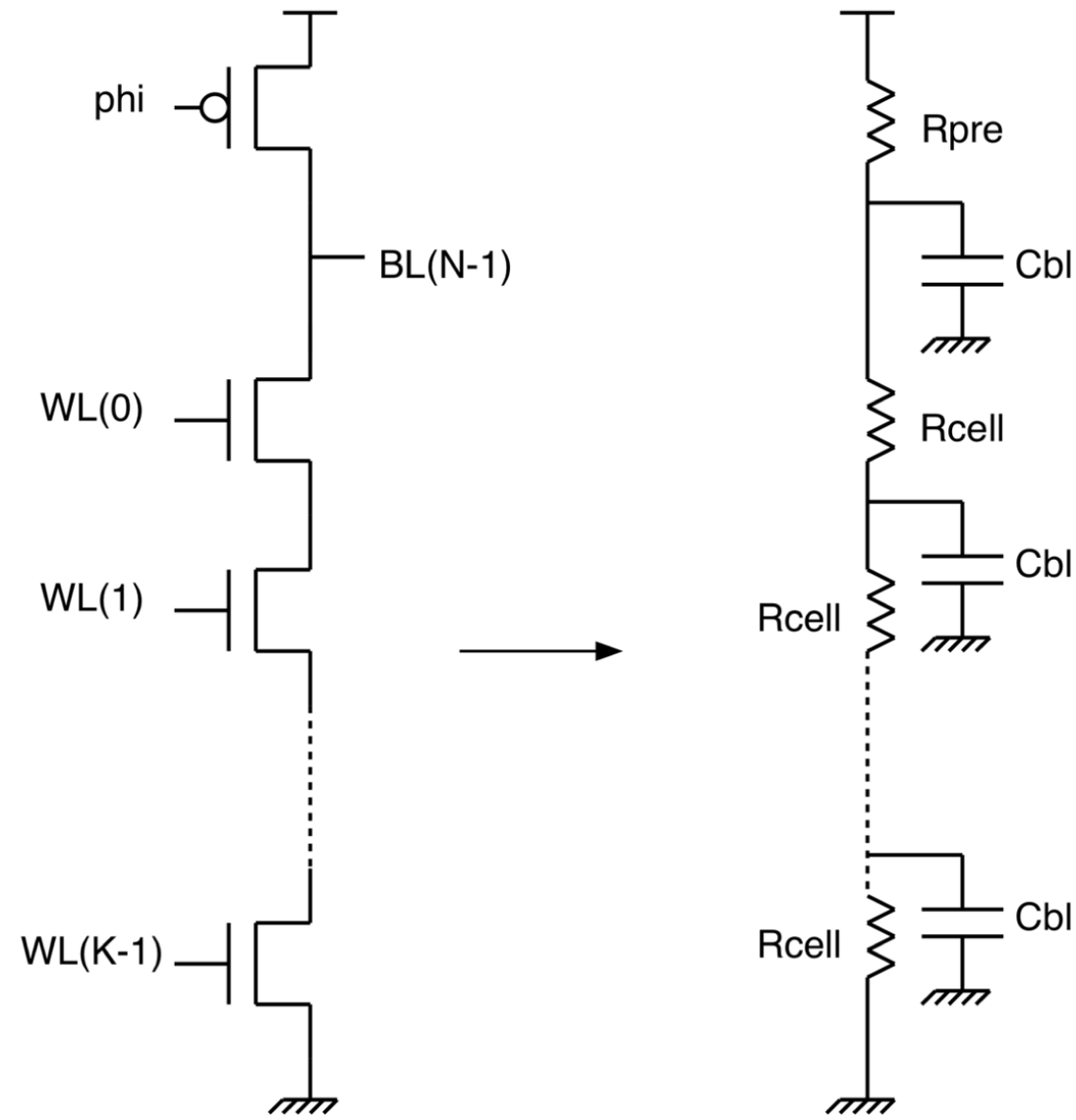

$$\tau_{\text{pre}} = (K+1)R_{\text{pre}}C_{\text{bl}} + \frac{K^2 R_{\text{cell}} C_{\text{bl}}}{2}$$

CALCULATING CELL DELAY

$$\tau_{cell} = R_{cell}C_{bl} + 2R_{cell}C_{bl} + 3R_{cell}C_{bl} + \ldots + KR_{cell}C_{bl}$$

$$\tau_{cell} = R_{cell}C_{bl}(1 + 2 + \ldots + K)$$

$$\tau_{cell} = R_{cell}C_{bl}K(K+1)/2$$

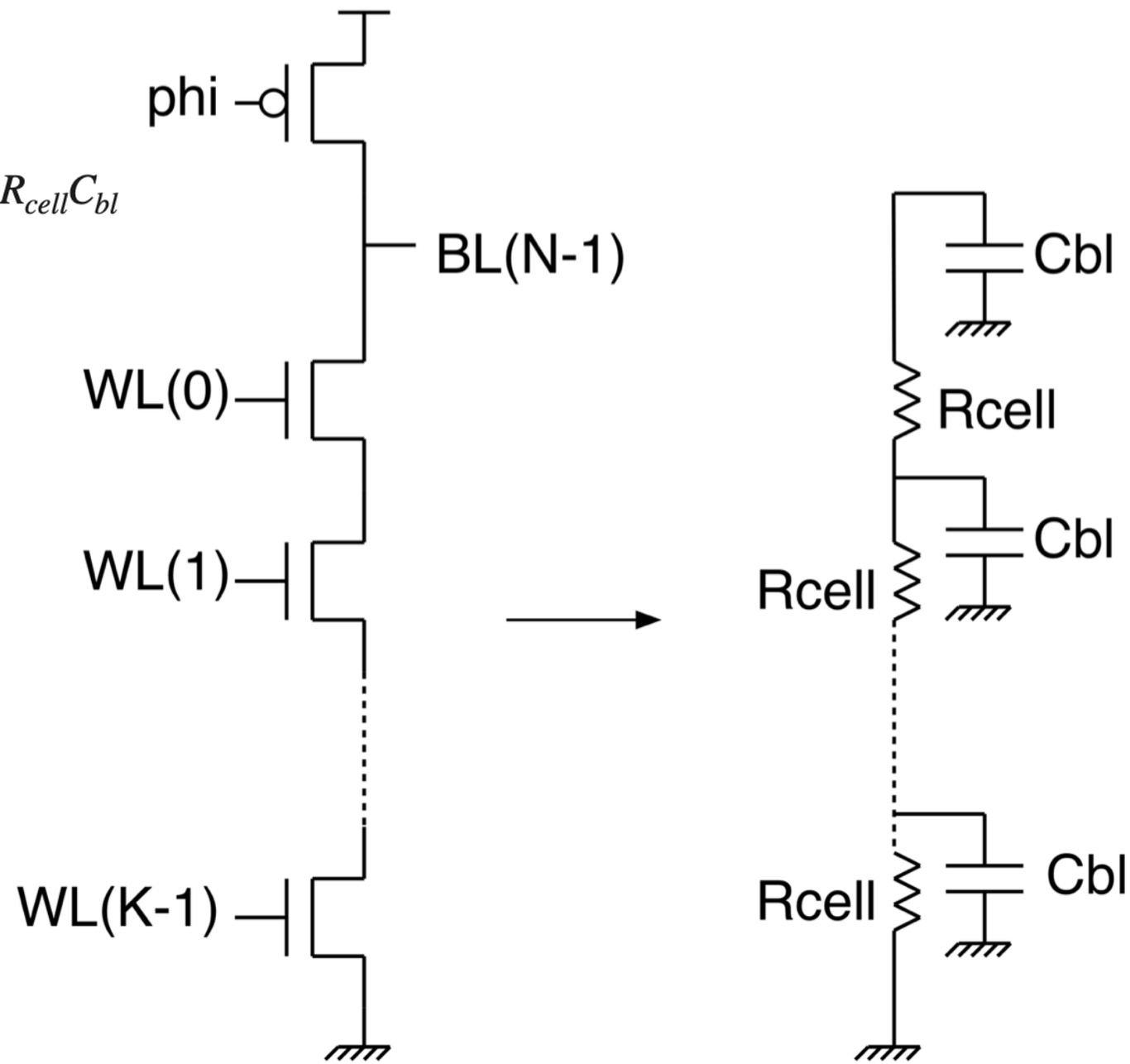

CALCULATING WORD LINE DELAY

- It is identical to the NOR Rom